Environmental Noise Assessment

Car Wash at 1609 Watt Avenue

Sacramento County, California

BAC Job # 2014-013

Prepared For:

Quick Quack Car Wash

Attn: Mr. Travis Kimball
P.O. Box 2730
Carmichael, CA 95609

Prepared By:

Bollard Acoustical Consultants, Inc.

Paul Bollard, President

February 6, 2014

BOLLARD
Acoustical Consultants

3551 Bankhead Road ‣ Loomis, CA 95650 ‣ Phone: (916) 663-0500 ‣ Fax: (916) 663-0501 ‣ BACNOISE.COM

Introduction

The proposed project consists of the construction of a Quick Quack Car Wash located at 1609 Watt Avenue in Sacramento County, California. Existing land uses in the project vicinity include single-family homes to the immediate south, an Orchard Supply Hardware store to the west, a restaurant to the north and Arden Middle School across the street to the east. The project site area and site plan are presented as Figures 1 and 2, respectively.

Due to the proximity of the proposed project to the existing residential uses to the immediate south, the project applicant has retained Bollard Acoustical Consultants, Inc. (BAC) to prepare an acoustical analysis for this project. The purposes of this analysis are to quantify noise levels associated with the proposed project, to assess the state of compliance of those noise levels with applicable Sacramento County noise standards, and if necessary, to recommend measures to reduce those noise levels to acceptable limits at the nearest noise sensitive uses.

Background on Noise and Acoustical Terminology

Noise is often described as unwanted sound. Sound is defined as any pressure variation in air that the human ear can detect. If the pressure variations occur frequently enough (at least 20 times per second), they can be heard and are called sound. The number of pressure variations per second is called the frequency of sound, and is expressed as cycles per second, called Hertz (Hz).

Measuring sound directly in terms of pressure would require a very large and awkward range of numbers. To avoid this, the decibel scale was devised. The decibel scale uses the hearing threshold (20 micropascals of pressure), as a point of reference, defined as 0 dB. Other sound pressures are then compared to the reference pressure, and the logarithm is taken to keep the numbers in a practical range. The decibel scale allows a million-fold increase in pressure to be expressed as 120 dB. Another useful aspect of the decibel scale is that changes in decibel levels correspond closely to human perception of relative loudness. Figure 3 illustrates common noise levels associated with various sources.

The perceived loudness of sound is dependent upon many factors, including sound pressure level and frequency content. However, within the usual range of environmental noise levels, perception of loudness is relatively predictable, and can be approximated by weighing the frequency response of a sound level meter by means of the standardized A-weighing network. There is a strong correlation between A-weighted sound levels (expressed as dBA) and community response to noise. For this reason, the A-weighted sound level has become the standard tool of environmental noise assessment. All noise levels reported in this section are in terms of A-weighted levels. Please see Appendix A for definitions of acoustical terminology used in this report.

Figure 1

Quick Quack Car Wash - Sacramento County, California

Project Area and Short-Term Ambient Noise Measurement Locations

BOLLARD
Acoustical Consultants

Scale (feet)
0 60 120

Figure 2

Quick Quack Car Wash - Sacramento County, California

Project Site Plan

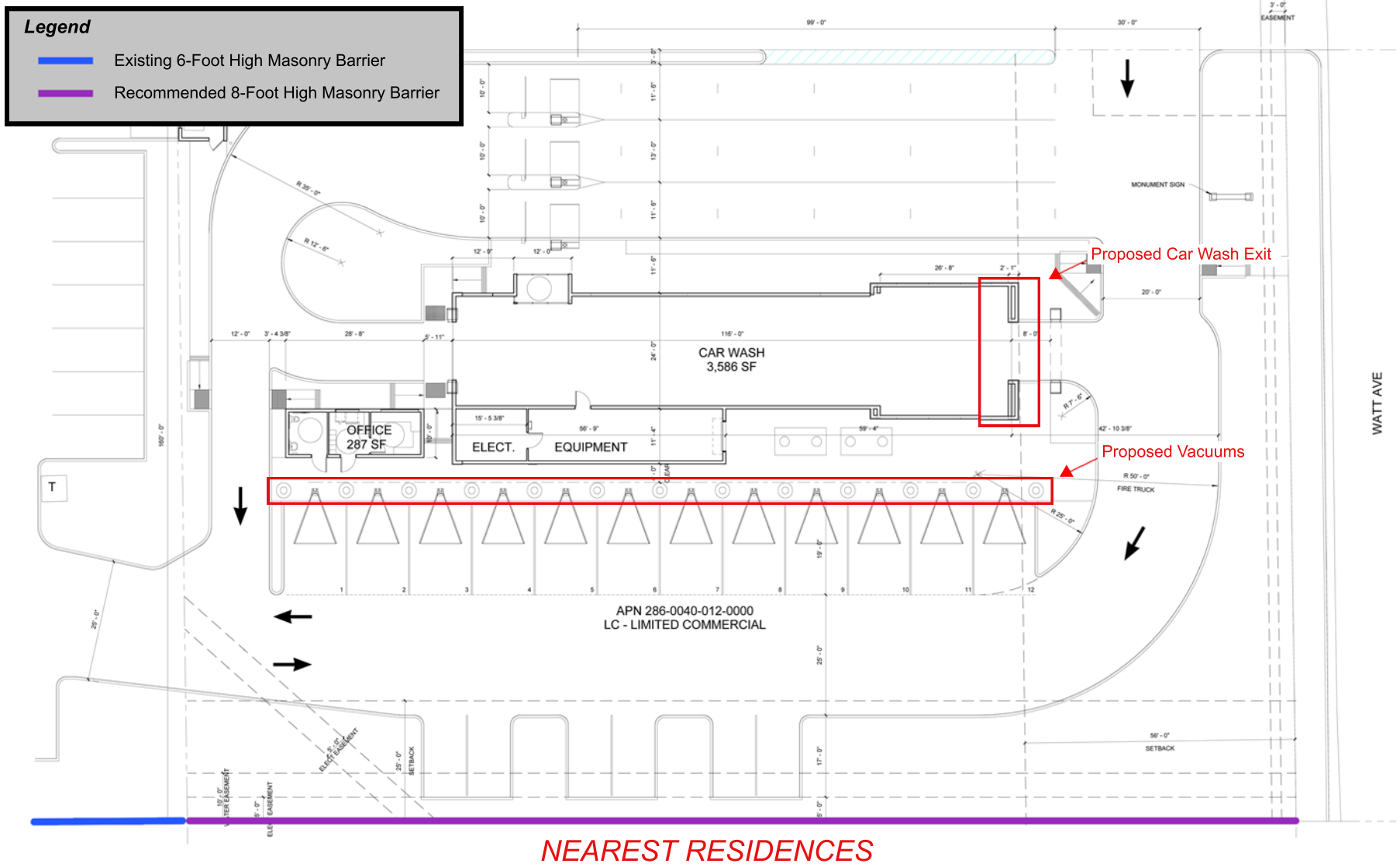

BOLLARD
Acoustical Consultants

Scale (feet)

0 20 40

Figure 3
Typical A-Weighted Sound Levels of Common Noise Sources

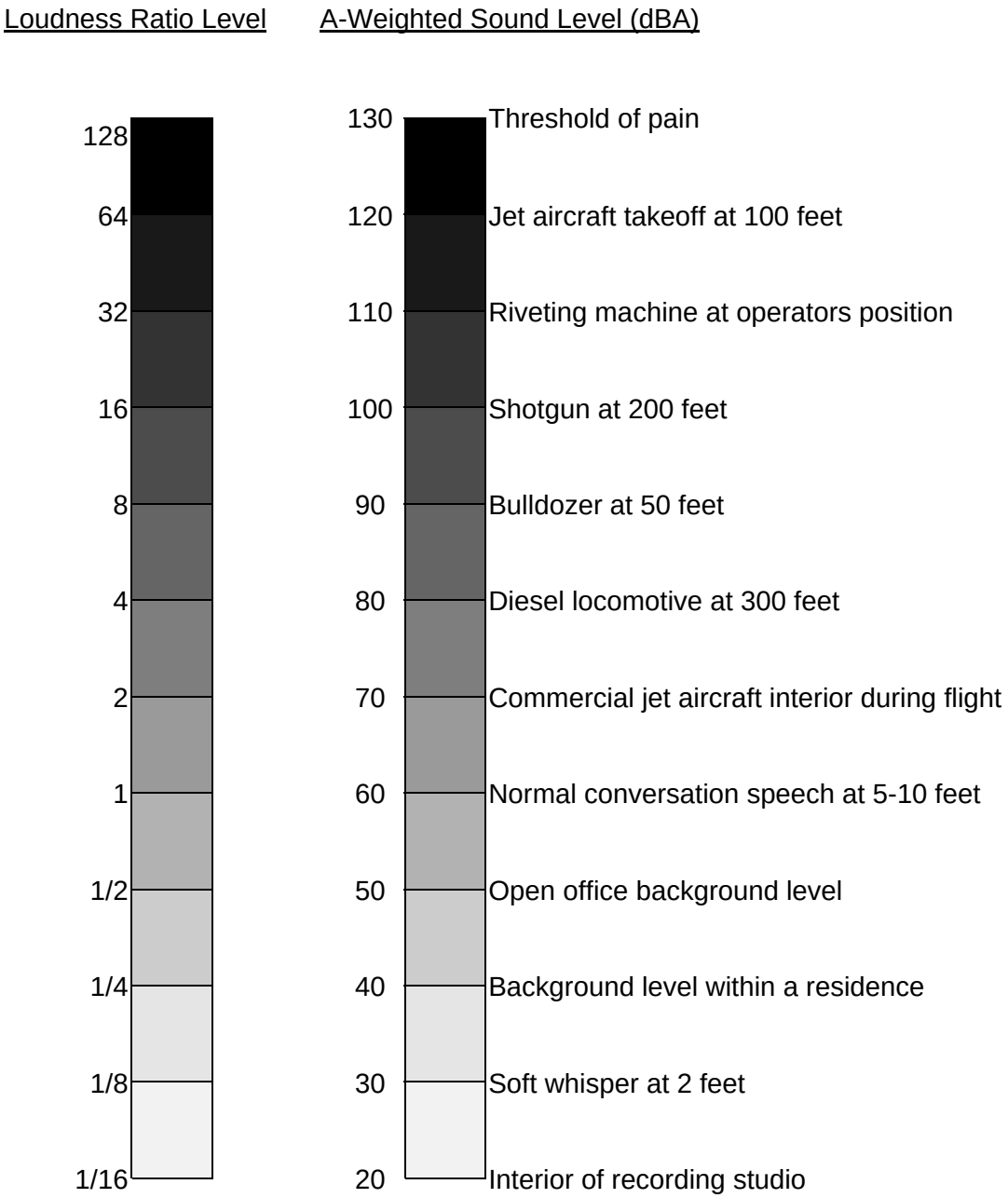

Criteria for Acceptable Noise Exposure

Sacramento County General Plan Noise Element

The Sacramento County Noise Element of the General Plan establishes hourly noise exposure limits for non-transportation (stationary) noise sources affecting residential land uses/receivers. These limits are summarized in Table 1, and are applicable to this project.

Table 1
Non-Transportation Noise Standards
Median (L50) / Maximum (Lmax)[a]
Sacramento County Noise Element

	Outdoor Area[b]		Interior[c]
Land Use	**Daytime**	**Nighttime**	**Day & Night**
All Residential	55 / 75	50 / 70	35 / 55
Transient lodging[d]	55 / 75	--	35 / 55
Hospitals, nursing homes[e,f]	55 / 75	--	35 / 55
Theaters, auditoriums, music halls[f]	--	--	30 / 50
Churches, meeting halls[f]	55 / 75	--	35 / 60
Office buildings[f]	60 / 75	--	45 / 65
Commercial buildings[f]	--	--	45 / 65
Playgrounds, neighborhood parks[f]	65 / 75	--	--
Industry[f]	60 / 80	--	50 / 70

Notes:

a The table 1 standards shall be reduced by 5 dB for sounds consisting primarily of speech or music, and for recurring impulsive sounds. If the existing ambient noise level exceeds the standards of Table 1, then the noise level standards shall be increased at 5 dB increments to encompass the ambient.

b Sensitive areas are defined in the acoustic terminology section.

c Interior noise level standards are applied within noise-sensitive areas of the various land uses, with windows and doors in the closed positions.

d Outdoor activity areas of transient lodging facilities are not commonly used during nighttime hours.

e Hospitals are often noise-generating uses. The exterior noise level standards for hospitals are applicable only at clearly identified areas designated for outdoor relaxation by either hospital staff or patients.

f The outdoor activity areas of these uses (if any), are not typically utilized during nighttime hours.

g Where median (L50) noise level data is not available for a particular noise source, average (Leq) values may be substituted for the standards of this table provided the noise source in question operates for at least 30 minutes of an hour. If the source in question operates less than 30 minutes per hour, then the maximum noise level standards shown would apply.

Source: Sacramento County General Plan (2011)

The project applicant has indicated that the car wash would operate during daytime hours only. Therefore, the noise generating aspects of the project were assessed relative to the County's daytime noise standards.

Existing Ambient Noise Environment

The noise environment in the vicinity of the nearest noise-sensitive receivers is defined primarily by traffic noise from Watt Avenue. To generally quantify background noise levels at the nearest residential locations, Bollard Acoustical Consultants, Inc. staff conducted two short-term ambient noise level measurement on the project site along the southern property line on February 4, 2014. The noise measurement locations are depicted in Figure 1 and the measurement results are provided in Table 2.

Larson Davis Laboratories (LDL) Model 820 precision integrating sound level meters equipped with LDL ½" microphones were used for the ambient survey. The meters were calibrated before use with an LDL Model CAL200 acoustical calibrator to ensure the accuracy of the measurements. The equipment used meets all pertinent specifications of the American National Standards Institute for Type 1 (precision) sound level meters (ANSI S1.4).

Table 2
Summary of Short-Term Ambient Noise Monitoring
Car Wash at 1609 Watt Avenue – February 4, 2014

		Measured Noise Levels (dB)		
Location[1]	Time	L_{eq}	L_{50}	L_{max}
1	3:10 PM	57	56	65
2	3:10 PM	66	64	75

Notes: [1] See Figure 1 for noise measurement locations.
Source: Bollard Acoustical Consultants, Inc. (2014)

The background noise level data provided in Table 2 indicate that noise levels measured at the nearest noise-sensitive receiver locations exceed the daytime exterior noise level standards for residential uses shown in Table 1. As a result, the daytime L50 standard has been increased by 5 dB to encompass the measured ambient at site 1 (56 dB L_{50}). The adjusted daytime median noise level standard for this project would be 60 dB L_{50}. The maximum daytime noise level standard of 75 dB L_{max} was not adjusted. Compliance with the adjusted 60 dB L_{50} and unadjusted 75 dB L_{max} noise standards will ensure that the project does not result in a significant noise level increase in the community.

Evaluation of Project-Related Noise Levels

Vacuum Noise

In order to assess the noise generation of the vacuum operations, Bollard Acoustical Consultants, Inc. utilized reference noise level data provided by the project applicant. The proposed vacuum system is expected to generate a noise level of approximately 61 dB L_{max} at a distance of 50 feet. This analysis is based on the use of this vacuum type.

Based upon the proposed vacuum system reference noise level data, the proposed location of the vacuum units and the worst-case operating conditions (thirteen vacuums operating continuously during daytime hours), vacuum noise levels are predicted to be approximately 67 dB L_{50} at the nearest residential property line to the south. This noise exposure would exceed the County of Sacramento County's adjusted 60 dB L_{50} daytime noise level criteria by 7 dB. As a result, consideration of additional noise mitigation measures would be warranted for this aspect of the project.

Car Wash Noise

Based on the experience of Bollard Acoustical Consultants, noise levels generated by car washes are primarily due to the drying portion of the operation. As a means of determining the potential noise impacts associated with the proposed car wash, Bollard Acoustical Consultants, Inc. utilized noise level data provided by Sonny's Enterprises/The Car Wash Factory for the Dryer/Blower Assembly, One Arch 45HP Part # BL1-45HP-1. The reference noise level at the entrance, where the blowers would be located, is 86 dB L_{max} at 20 feet. Appendix B provides the noise specification sheet for the proposed project blowers.

BAC staff conducted reference noise level measurements at an existing Quick Quack car wash located at 3050 Sunrise Boulevard in March 2008. Measurements were conducted at the exit of the car wash to quantify the noise level generation of the blower/dryer assembly. Directly facing the exit of the car wash, 0 degrees off-axis, the blower was measured to generate a noise level of 86 dB L_{max} at 25 feet. The measured equipment noise level at the Sunrise location is comparable to the proposed equipment at the project site (86 dB L_{max} at 20 feet).

Noise level measurements were also conducted at off-axis positions in order to quantify the noise level reduction provided by the building structure. Specifically, measurements were conducted at positions 45 and 90 degrees relative to the façade of the car wash exit, both at a reference distance of 25 feet. At 45 degrees off-axis, the blowers generated a noise level of 78 dB L_{max}. At 90 degrees off-axis, the blowers generated a noise level of 70 dB L_{max}. This represents a noise level reduction of 16 dB due to the intervening building structure. Because the nearest residences to the south are located at a position that is also 90 degrees off-axis, the reference noise level measurements of the proposed blower assembly have been reduced by 16 dB.

Because the drying cycle represents a small portion of the overall wash, the dryers are anticipated to operate for no more than 30 minutes during any given hour. The calculated Hourly L_{eq} given 30 minute usage of the dryer cycle at the exit would be 67 dB at a reference distance of 20 feet. The Table 3 data shows the predicted noise levels at the nearest residential property lines from the car wash exit.

Table 3
Predicted Car Wash Noise Levels
Car Wash at 1609 Watt Avenue – Sacramento County, California

Receiver	Noise Source	Distance (feet)[1]	Predicted Level, dB[2]	
			L_{50}	L_{max}
Residences to the South	Dryers (Car Wash Exit)	90	54	57

Notes:

1 Distances are measured in feet from the property line of the nearest existing residences.

2 Based on manufacturers reference noise emission data provided by project applicant.

Source: Bollard Acoustical Consultants, Inc. (2014)

The Table 3 data indicate that predicted average and maximum car wash noise levels at the nearest residences to the west would be 53 dB L_{50} and 56 dB L_{max}, which would comply with the County of Sacramento County's daytime noise level criteria. Furthermore, measured existing ambient noise levels at the residences nearest to the car wash exit, represented as Site 2 in Table 2, were considerably higher at 64 dB L_{50} and 75 dB L_{max} due to traffic on Watt Avenue. As a result, consideration of additional noise mitigation measures would not be warranted for this aspect of the project.

Noise Mitigation Measures

Vacuum Noise

Proposed vacuum noise levels were predicted to exceed the County's adjusted 60 dB L_{50} noise level criterion at the nearest residences to the south by approximately 7 dB. It is recommended, therefore, that further noise reduction be required of the vacuums. An analysis of noise barrier effectiveness was performed for this project and is included as Appendix C. The results of that analysis indicate that an 8-foot high masonry barrier constructed at the location shown on Figure 2 (along the southern project boundary), would reduce predicted vacuum noise levels to 59 dB L_{50}. As a result, no additional noise mitigation measures would be warranted for this aspect of the project.

Conclusions and Recommendations

Noise levels generated by the proposed car wash are predicted to comply with the County of Sacramento Noise Element standards at the nearby residences to the west provided the following noise mitigation measures are incorporated in the project design:

1. The facility operations should be limited to daytime hours (7 am to 10 pm), as proposed.

2. An 8-foot tall masonry barrier should be constructed at the location shown on Figure 2.

The above mentioned mitigation measures would result in compliance with the County of Sacramento County noise level criteria. These conclusions are based on the site plan shown in Figure 2 and on the manufacturers noise level data cited herein. Deviations from these plans or data could cause noise levels to differ from those predicted in this assessment.

This concludes our environmental noise assessment for the proposed Car Wash at 1609 Watt Avenue, in Sacramento County, California. Please contact BAC at (916) 663-0500 or paulb@bacnoise.com with any questions or requests for additional information.

Appendix A

Acoustical Terminology

Acoustics	The science of sound.
Ambient Noise	The distinctive acoustical characteristics of a given space consisting of all noise sources audible at that location. In many cases, the term ambient is used to describe an existing or pre-project condition such as the setting in an environmental noise study.
Attenuation	The reduction of an acoustic signal.
A-Weighting	A frequency-response adjustment of a sound level meter that conditions the output signal to approximate human response.
Decibel or dB	Fundamental unit of sound, A Bell is defined as the logarithm of the ratio of the sound pressure squared over the reference pressure squared. A Decibel is one-tenth of a Bell.
CNEL	Community Noise Equivalent Level. Defined as the 24-hour average noise level with noise occurring during evening hours (7 - 10 p.m.) weighted by a factor of three and nighttime hours weighted by a factor of 10 prior to averaging.
Frequency	The measure of the rapidity of alterations of a periodic signal, expressed in cycles per second or hertz.
Ldn	Day/Night Average Sound Level. Similar to CNEL but with no evening weighting.
Leq	Equivalent or energy-averaged sound level.
Lmax	The highest root-mean-square (RMS) sound level measured over a given period of time.
Loudness	A subjective term for the sensation of the magnitude of sound.
Masking	The amount (or the process) by which the threshold of audibility is for one sound is raised by the presence of another (masking) sound.
Noise	Unwanted sound.
Peak Noise	The level corresponding to the highest (not RMS) sound pressure measured over a given period of time. This term is often confused with the Maximum level, which is the highest RMS level.
RT_{60}	The time it takes reverberant sound to decay by 60 dB once the source has been removed.
Sabin	The unit of sound absorption. One square foot of material absorbing 100% of incident sound has an absorption of 1 sabin.
SEL	A rating, in decibels, of a discrete event, such as an aircraft flyover or train passby, that compresses the total sound energy of the event into a 1-s time period.
Threshold of Hearing	The lowest sound that can be perceived by the human auditory system, generally considered to be 0 dB for persons with perfect hearing.
Threshold of Pain	Approximately 120 dB above the threshold of hearing.

Appendix B

Enviromental Noise with Dryer OFF: 70 dba

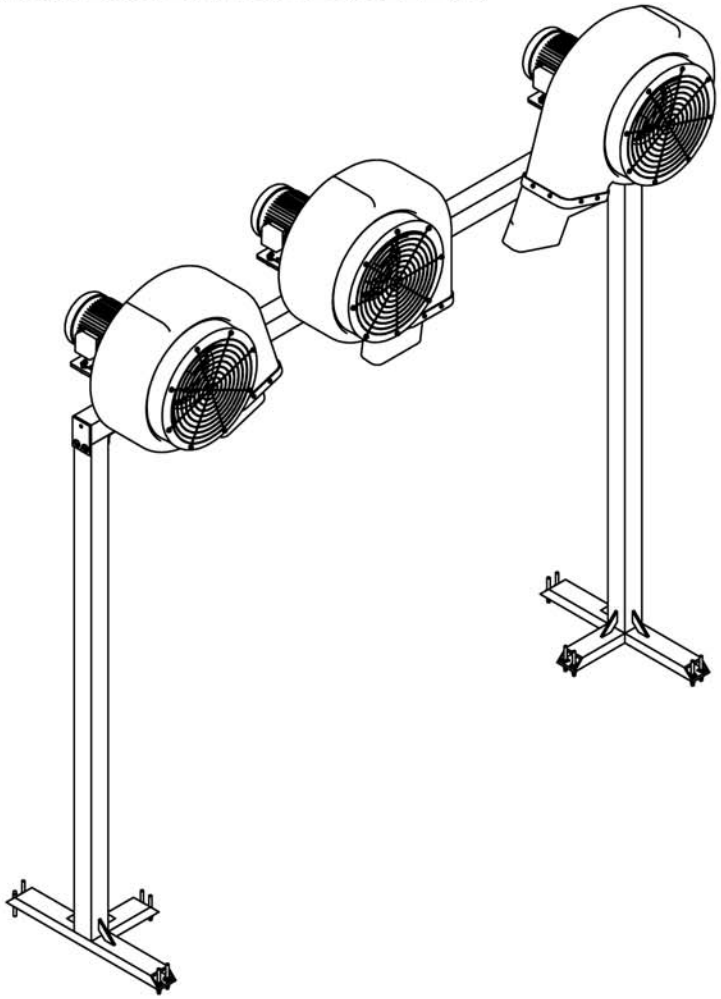

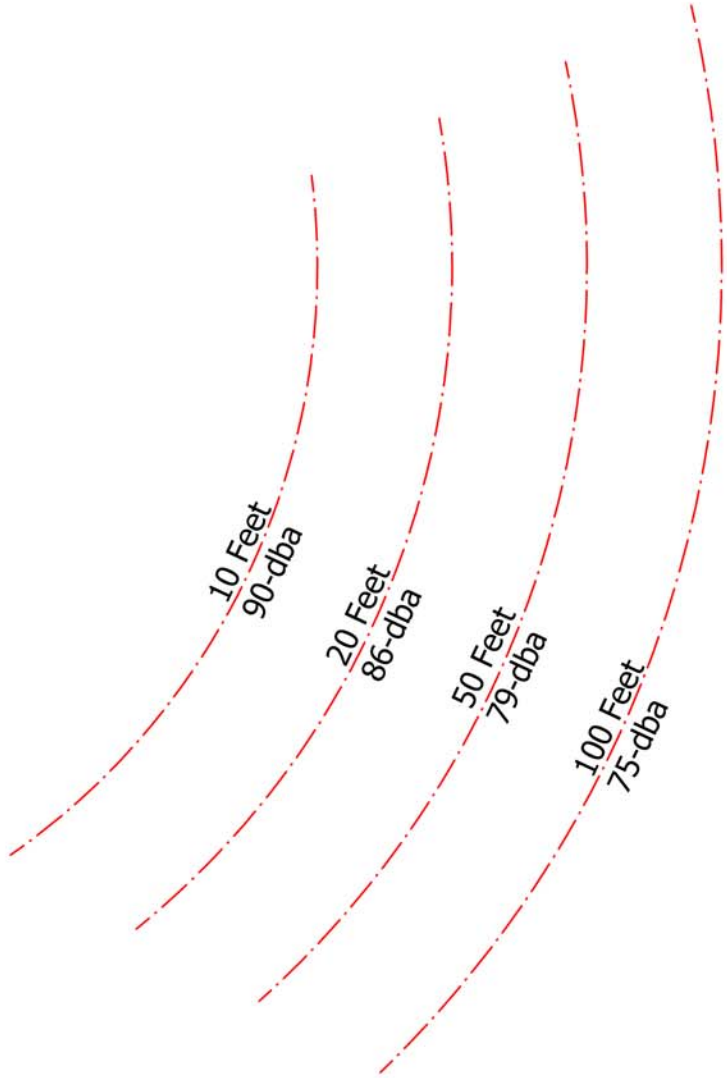

THIRD ANGLE PROJECTION	MACHINING TOLERANCES	DRAWN LVerdecia	8/26/2011	SONNY'S ENTERPRISES THE CARWASH FACTORY
BREAK ALL SHARP CORNERS. PART TO BE FREE OF BURRS.	FRACTION± 1/16" .XX DECIMAL ± 0.030 .XXX DECIMAL ± 0.005	APPROVED	8/1/2012	
UNLESS OTHERWISE SPECIFIED, ALL DIMENSIONS ARE IN INCHES	ANGULARITY ± 2° FINISH 125	CATEGORY BLOWER		DESCRIPTION BLOWER ASSEMBLY, ONE ARCH 45HP
		THIS SHEET CONTAINS CONFIDENTIAL INFORMATION, IMAGES AND TRADE SECRETS OF SONNY'S ENTERPRISES, INC. ANY UNAUTHORIZED USE OR DISCLOSURE OF ANY PORTION THEREOF IS STRICTLY PROHIBITED. THIS WORK IS THE EXCLUSIVE PROPERTY OF SONNY'S ENTERPRISES, INC. ALL RIGHTS RESERVED.		PART NUMBER BL1-45HP-1
MATERIAL				SHEET 2 OF 2 / SIZE A / SCALE N.T.S.

Appendix C

Barrier Insertion Loss Calculation

Project Information:

Job Number: 2014-013
Project Name: Quick Quack Car Wash at 1609 Watt Avenue
Location(s): Residences to the south

Noise Level Data:

Source Description: Vacuums
Source Noise Level, dBA: 67
Source Frequency (Hz): 500
Source Height (ft): 3

Site Geometry:

Receiver Description: Backyard Area
Source to Barrier Distance (C_1): 80
Barrier to Receiver Distance (C_2): 10

Pad/Ground Elevation at Receiver: 0
Receiver Elevation[1]: 5
Base of Barrier Elevation: 0
Starting Barrier Height 6

Barrier Effectiveness:

Top of Barrier Elevation (ft)	Barrier Height (ft)	Insertion Loss, dB	Noise Level, dB	Barrier Breaks Line of Site to Source?
6	6	-5.7	61.3	Yes
7	7	-7.1	59.9	Yes
8	8	-8.5	58.5	Yes
9	9	-9.8	57.2	Yes
10	10	-10.9	56.1	Yes
11	11	-11.9	55.1	Yes
12	12	-12.8	54.2	Yes
13	13	-13.6	53.4	Yes
14	14	-14.3	52.7	Yes
15	15	-14.6	52.4	Yes
16	16	-15.3	51.7	Yes

Notes: 1.Standard receiver elevation is five feet above grade/pad elevations at the receiver location(s)

BOLLARD
Acoustical Consultants